CAS4 Series Timer

Description

CAS4 - □ □ □ □ □ □ □

- Rated supply voltage(AC24~380V; DC24V)
- Time range
  - T20: 0.01s~990h
  - T30: 0.01s~9990h
  - T40: 0.01s~99990h
- Installation
  - M: Flush mounting
  - H: Surface mounting, DIN Rail mounting
- Control signal: 0: Without control signal
- Contact
  - 2: 2C time delay output
  - 4: 1C time delay output and 1C instantaneous output
  - 6: 1C time delay and 1C instantaneous/2C time delay
- Display: S: Digital display and dial switch
- Operating mode: None: Power on delay
- Model

CAS4-S60HT□□

Specification

Rated Supply Voltage	AC24V, 36V, 110V, 220V, 380V 50Hz, DC24V(Operating voltage fluctuation range: 85% to 110% Ue)
Time range	0.01s~990h, 0.01s~9990h, 0.01s~99990h
Repetitive error	The range of time delay＞1s, Er≤1%, The range of time delay＜1S, Dr≤50ms
Contact	2C time delay, 1C time delay and 1C instantaneous, 1C time delay and 1C instantaneous/2C time delay
Rated Load of the Contact	3A AC220V(Resistive)
Electrical Life	100000 operations min. (3 A at 250 VAC/30 VDC, resistive load)
Ambient Temperature	-5℃~40℃
Ambient Humidity	If the ambient temperature is 20℃, the RH≤90%, if the ambient temperature is 40℃, the RH≤50%.
Altitude	≤2000m
Installation	Flush mounting, Surface mounting, 35mm DIN Rail mounting

Wiring Diagram

CAS4-S20HT□□

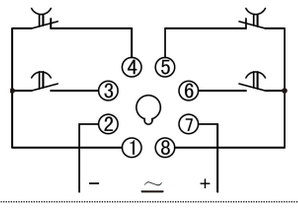

CAS4-S40HT□□

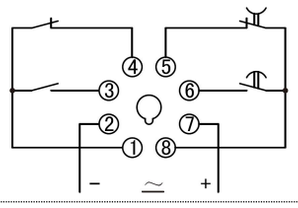

CAS4-S60HT□□

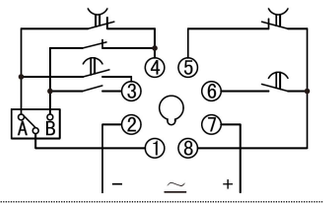

Operation time sequence

CAS4-S20HT□/CAS4-S60HT□□ A mode

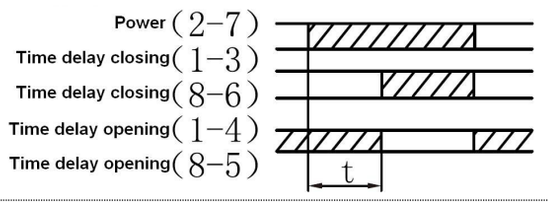

CAS4-S40HT□/CAS4-S60HT□□ B mode

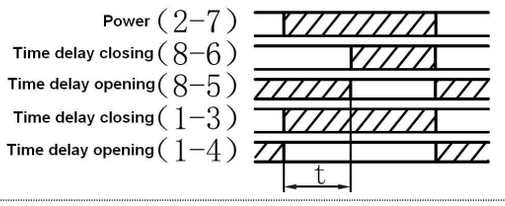

Dimension(mm) and Installation(mm)

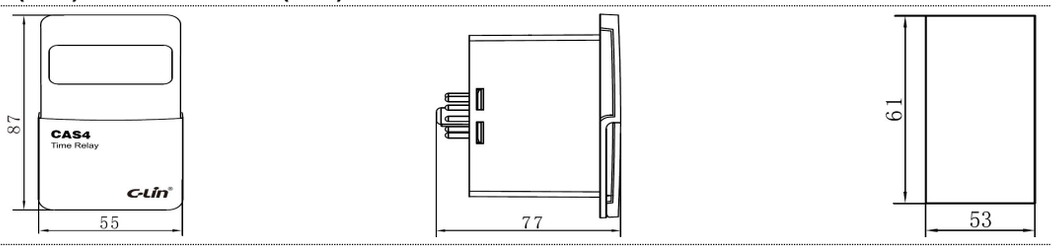

Application(Samples as CAS4)

Samples01

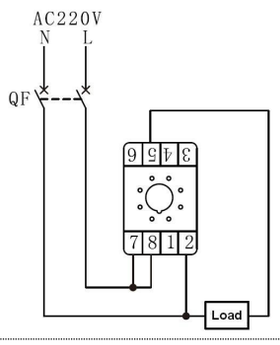

Samples02

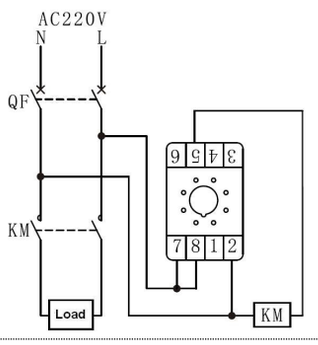

Samples03

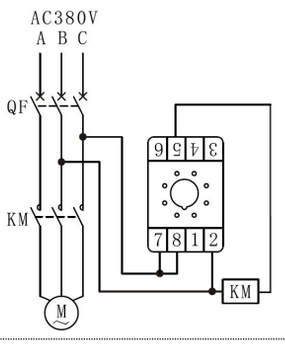
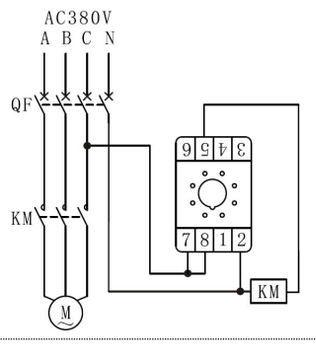
Samples04